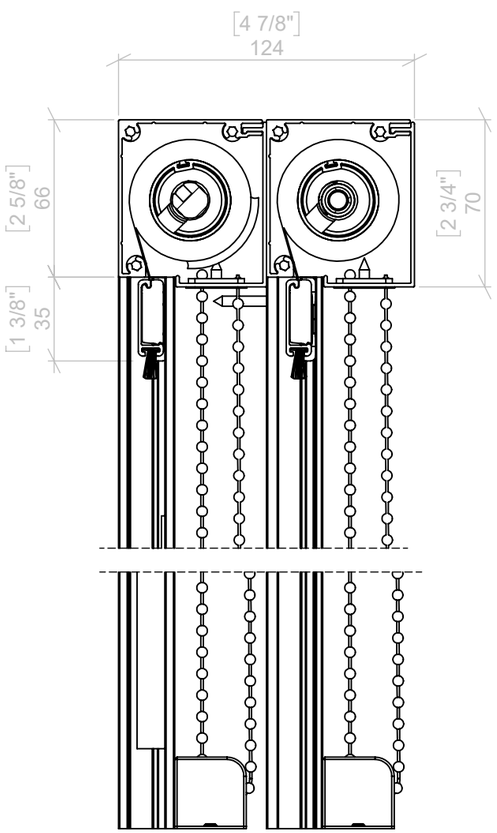

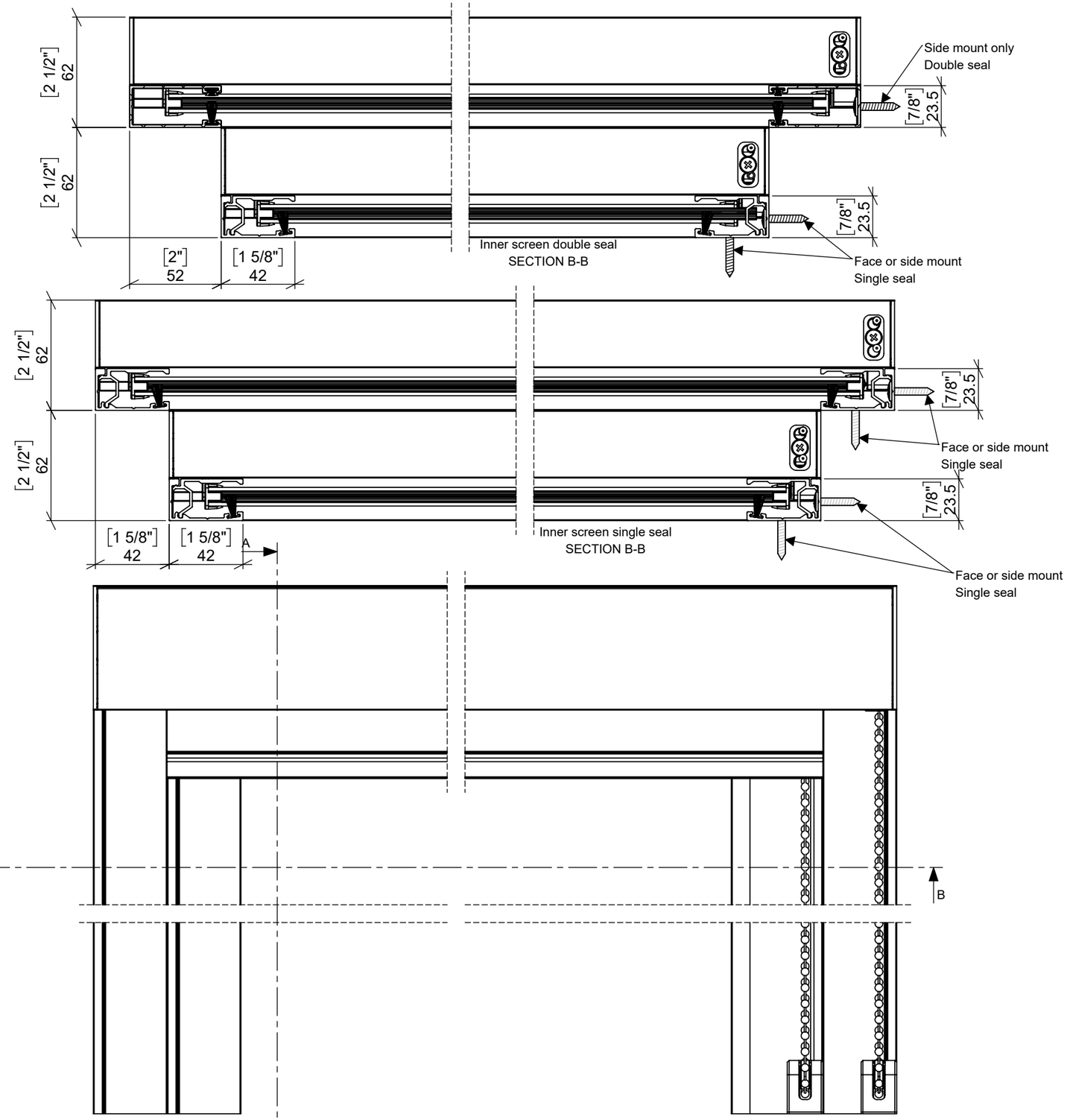

S6 Screen Product Details - Double Screen

Date	13 Apr 2023	Scale	1:2.5	Dwg no	S6-005
Revision	B	Page size	Tabloid	Pages	1 of 1

centor

This document is copyright and remains the property of Centor